weelko
the wellness
company
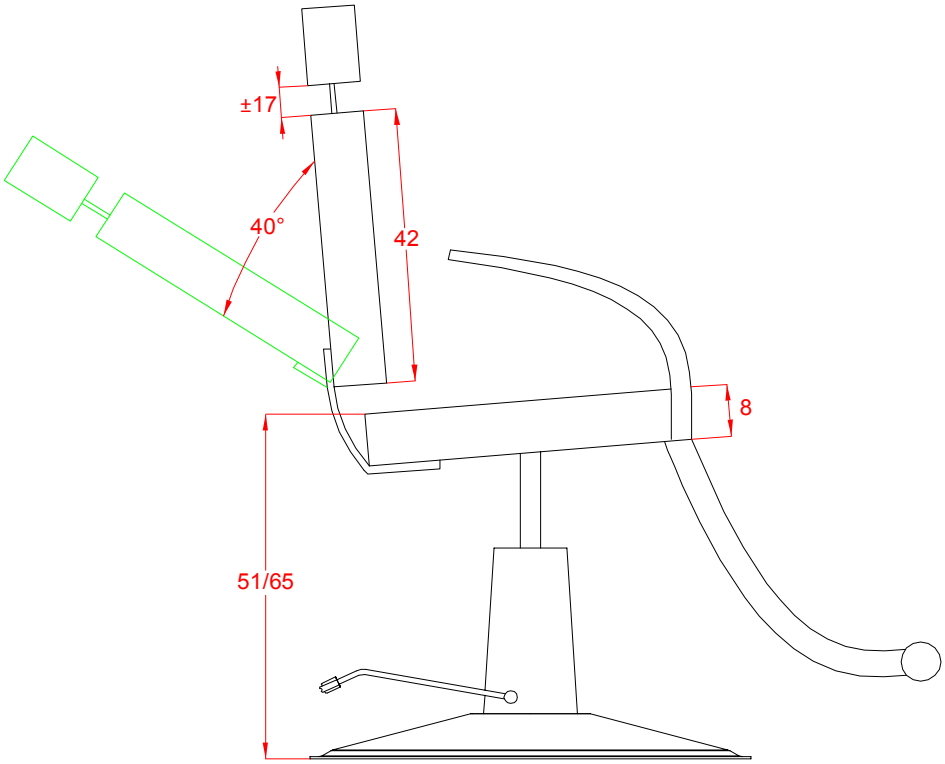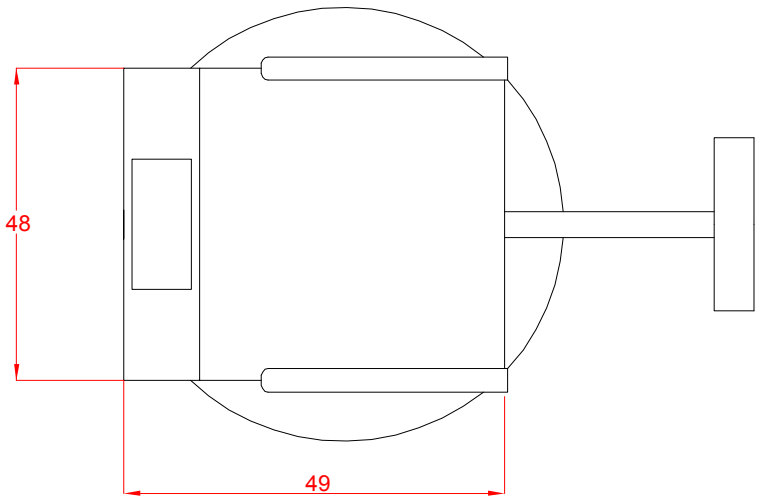
Platy